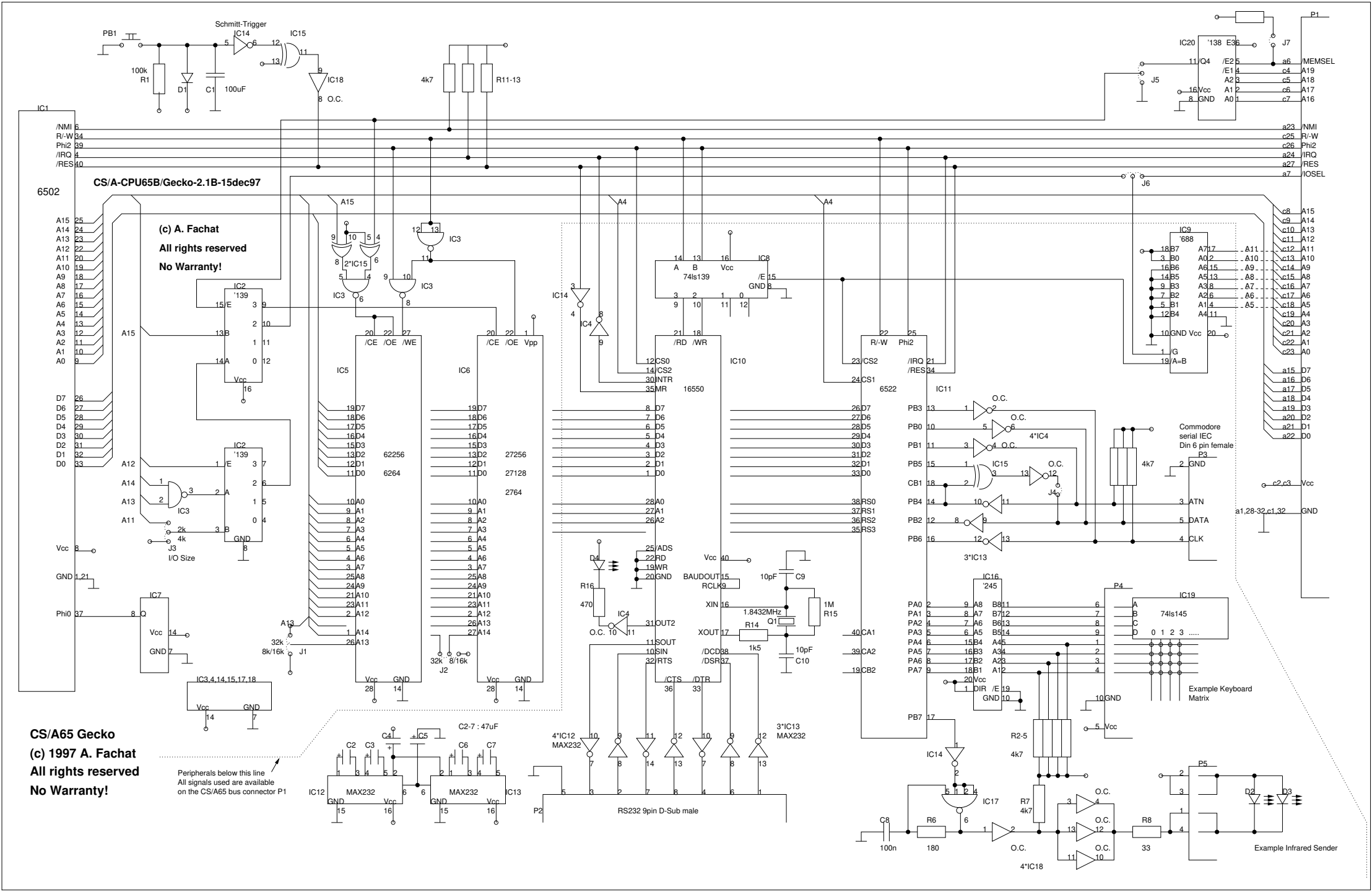
CS/A-CPU65B/Gecko-2.1B-15dec97
6502
(c) A. Fachat
All rights reserved
No Warranty!
CS/A65 Gecko
(c) 1997 A. Fachat
All rights reserved
No Warranty!
Peripherals below this line
All signals used are available
on the CS/A65 bus connector P1
Schmitt-Trigger
PB1
100k
R1
D1
C1
100uF
IC14
IC15
IC18
O.C.
4k7
R11-13
IC1
/NMI
R/-W
Phi2
/IRQ
/RES
A15
A14
A13
A12
A11
A10
A9
A8
A7
A6
A5
A4
A3
A2
A1
A0
D7
D6
D5
D4
D3
D2
D1
D0
Vcc
GND
Phi0
IC2
'139
IC3
2k
4k
J3
I/O Size
IC7
IC3,4,14,15,17,18
IC5
IC6
/CE
/OE
/WE
Vpp
62256
6264
27256
27128
2764
32k
8k/16k
J1
J2
IC8
74ls139
IC10
16550
/RD
/WR
CS0
CS2
INTR
MR
ADS
RD
WR
OUT2
SOUT
SIN
RTS
/CTS
/DTR
BAUDOUT
RCLK
XIN
XOUT
/DCD
/DSR
RS0
RS1
RS2
RS3
D4
R16
470
IC4
10pF
C9
1M
R15
1.8432MHz
Q1
R14
1k5
C10
C2-7 : 47uF
C4
C5
C2
C3
C6
C7
IC12
IC13
MAX232
4*IC12
3*IC13
P2
RS232 9pin D-Sub male
IC11
6522
R/-W
Phi2
/IRQ
/RES
CS2
CS1
PB3
PB0
PB1
PB5
CB1
PB4
PB2
PB6
PA0
PA1
PA2
PA3
PA4
PA5
PA6
PA7
CA1
CA2
CB2
PB7
4*IC4
IC15
3*IC13
IC16
'245
DIR
IC17
R7
4k7
R6
180
C8
100n
R8
33
4*IC18
R2-5
4k7
IC20
'138
E36
J5
J7
J6
P1
/MEMSEL
A19
A18
A17
A16
/NMI
R/-W
Phi2
/IRQ
/RES
IOSEL
IC9
'688
/A=B
P3
Commodore
serial IEC
Din 6 pin female
GND
ATN
DATA
CLK
P4
IC19
74ls145
Example Keyboard
Matrix
P5
D2
D3
Example Infrared Sender