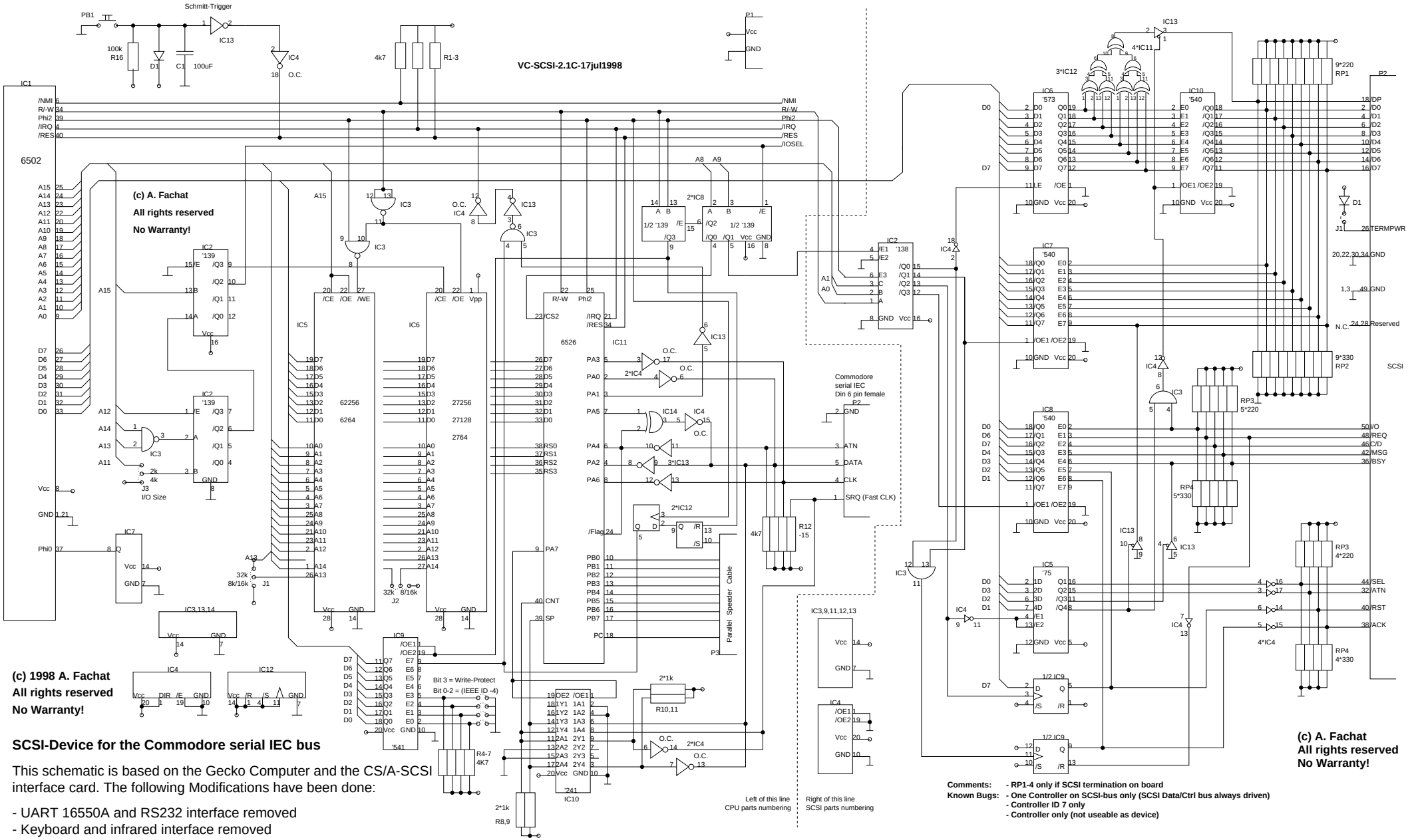

SCSI-Device for the Commodore serial IEC bus

This schematic is based on the Gecko Computer and the CS/A-SCSI interface card. The following Modifications have been done:

- UART 16550A and RS232 interface removed
- Keyboard and infrared interface removed
- replaced 6522 with a 6526, modified IEC bus (ATN in), added Fast Serial (from VC1581) and Parallel Speeder Cable support
- I/O Select logic simplified to a single 74LS138

Todo: - Fix parts numbers (CPU/SCSI)
- check if it works at all...

Warning: This is a preliminary, untested schematics, NO WARRANTY!!!